ELN-306C

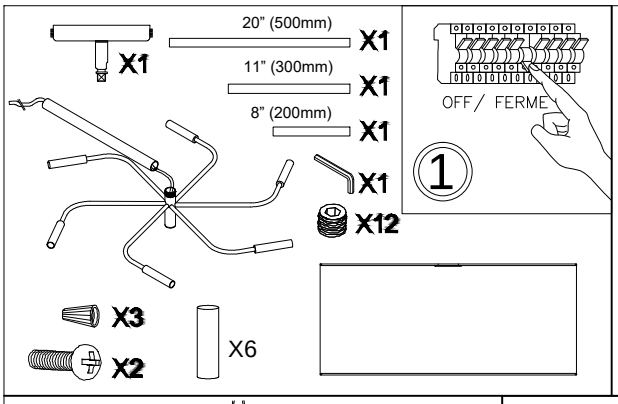

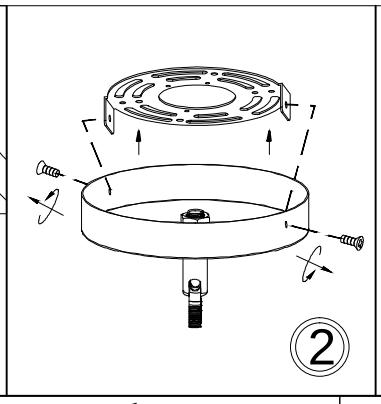

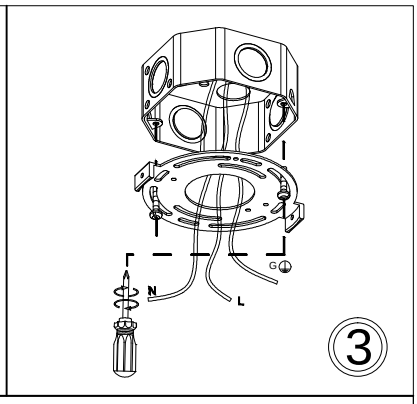

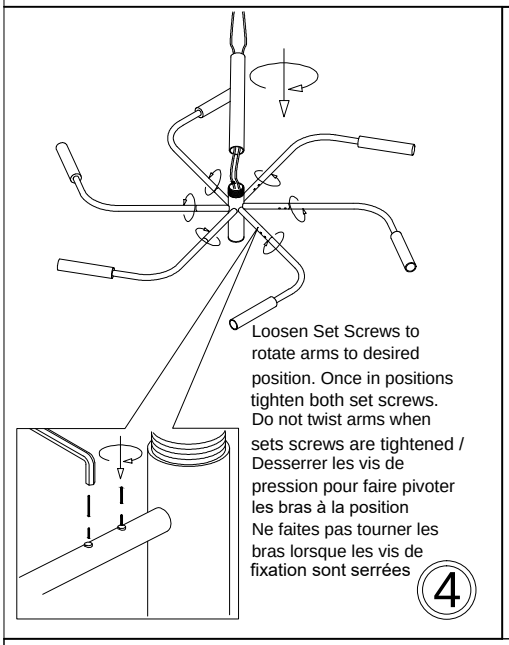

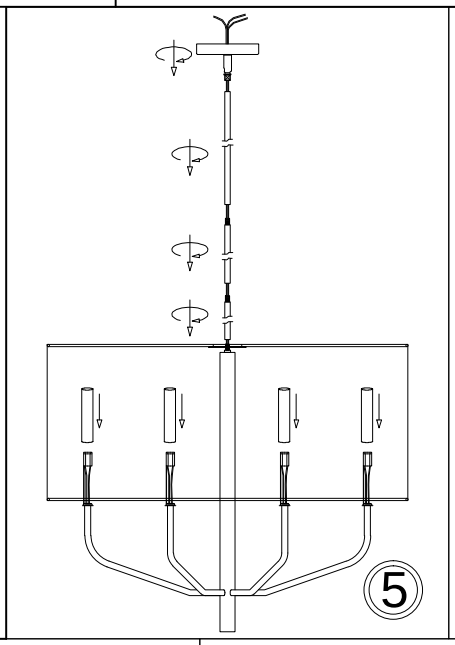

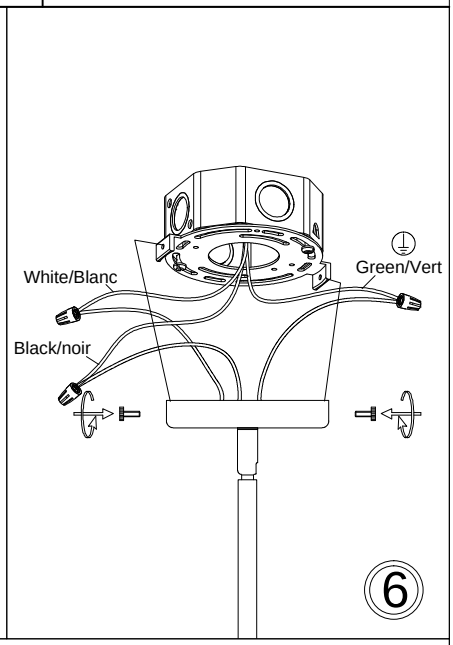

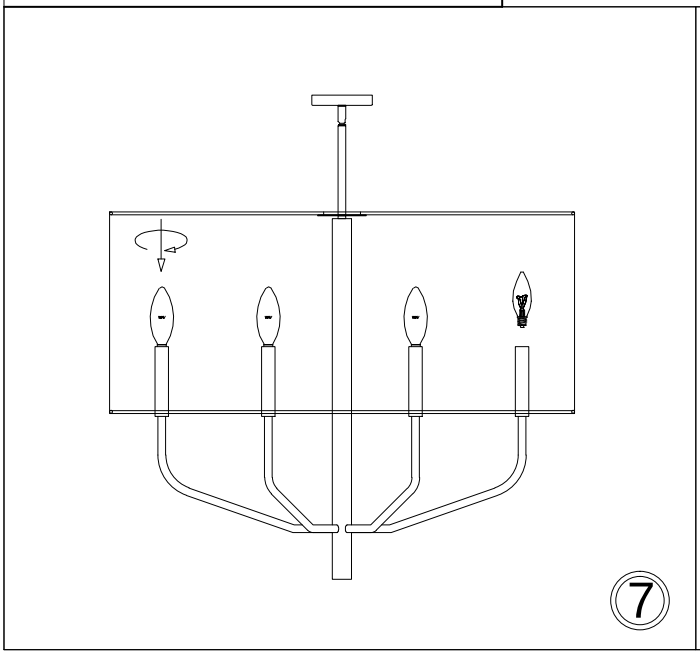

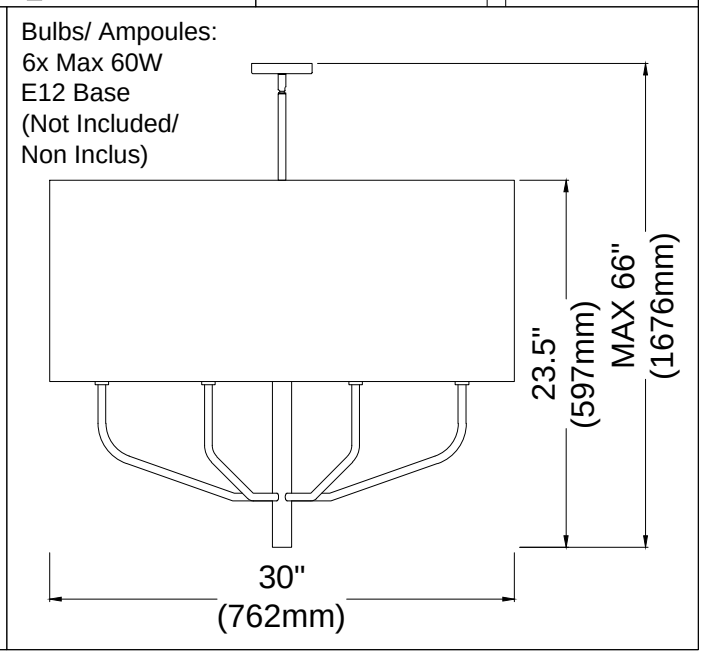

1401 Courtney Park Drive East, Mississauga, Ontario, Canada L5T 2E4
Tel: (905) 564-1262 Fax: (905) 564-1299 Email: dainolite@dainolite.ca Web: www.dainolite.ca

09/2022